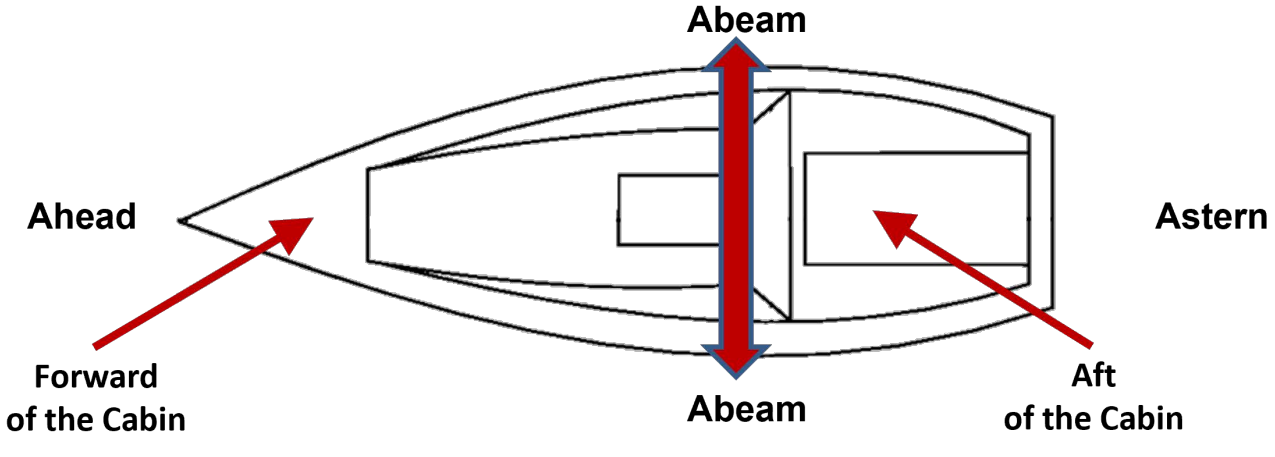
Abeam
Ahead
Astern
Forward
of the Cabin
Abeam
Aft
of the Cabin

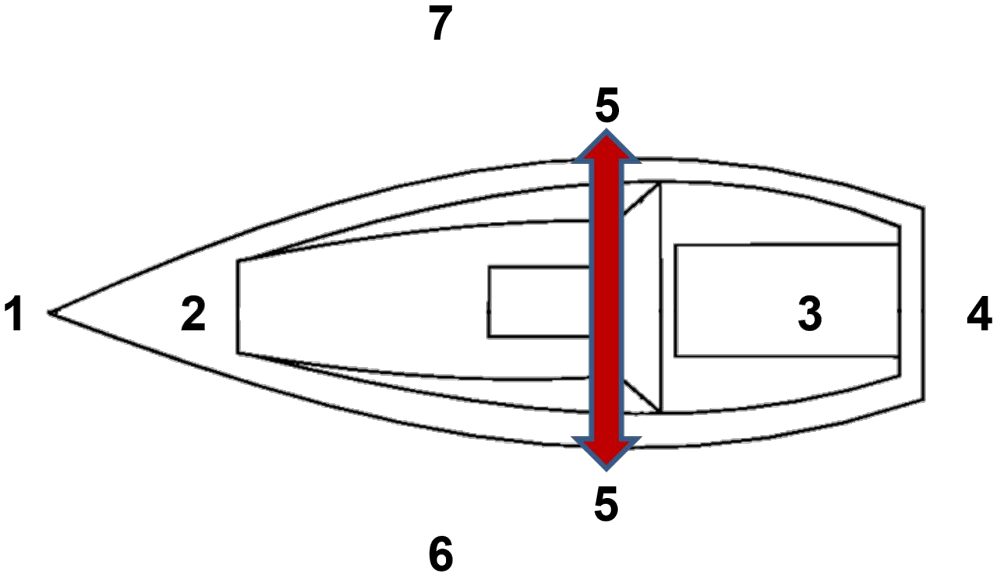
7
5
1
2
3
4
5
6